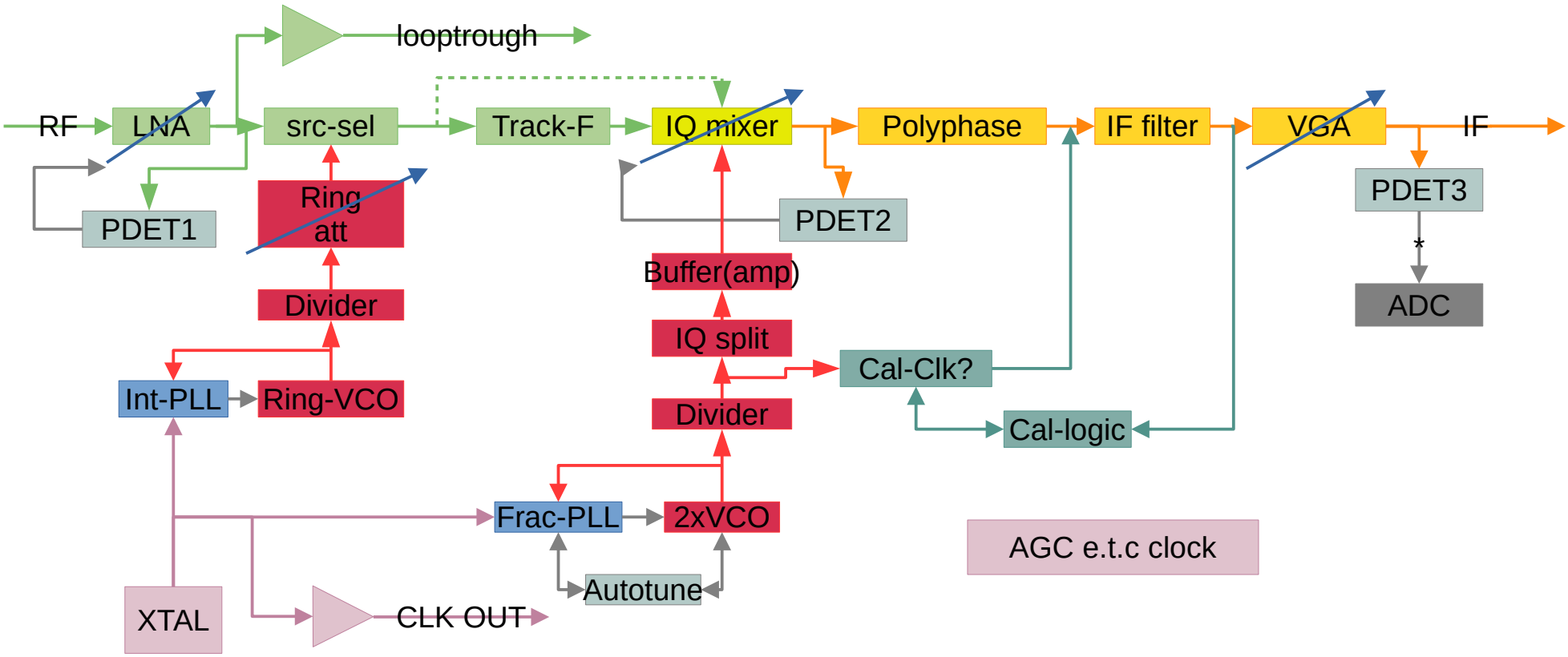
looptrough
RF
LNA
src-sel
Track-F
IQ mixer
Polyphase
IF filter
VGA
IF
PDET1
Ring att
PDET2
PDET3
*
ADC
Buffer(amp)
Divider
IQ split
Cal-Clk?
Int-PLL
Ring-VCO
Divider
Cal-logic
Frac-PLL
2xVCO
AGC e.t.c clock
Autotune
XTAL
CLK OUT

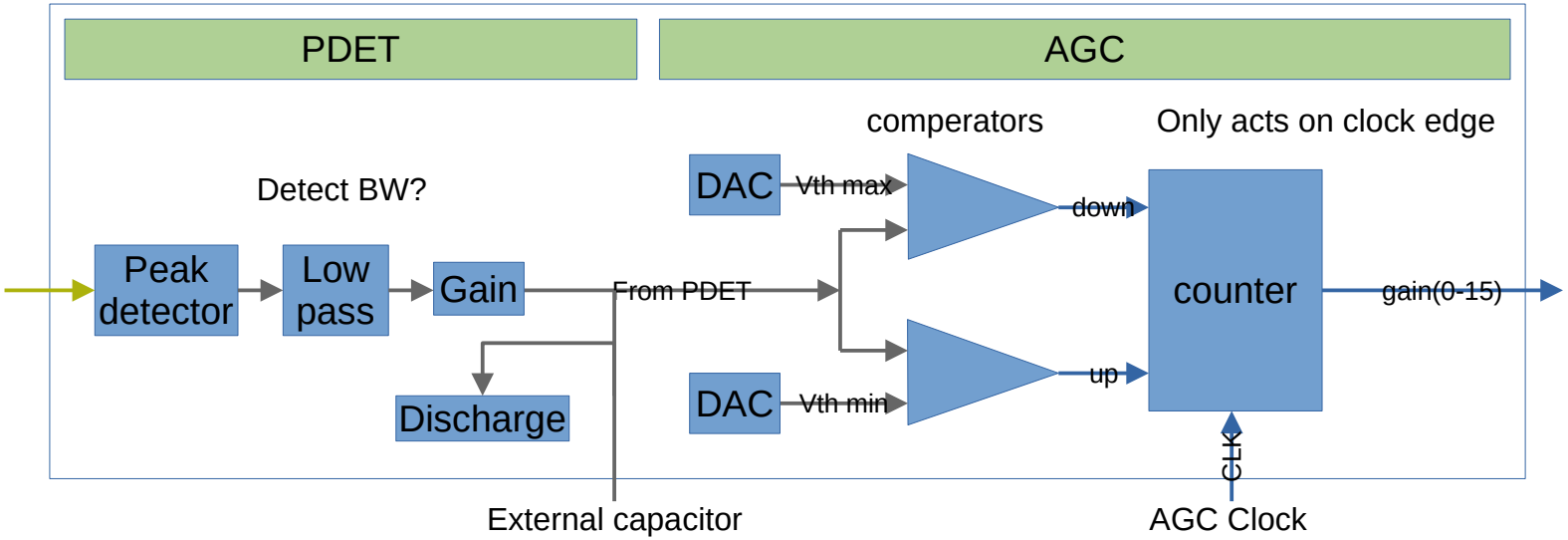
PDET
AGC
comperators
Only acts on clock edge
Detect BW?
DAC
Vth max
down
Peak detector
Low pass
Gain
From PDET
counter
gain(0-15)
Discharge
DAC
Vth min
up
CLK
External capacitor
AGC Clock